# 25mm & 16mm END WALL BRACKETS

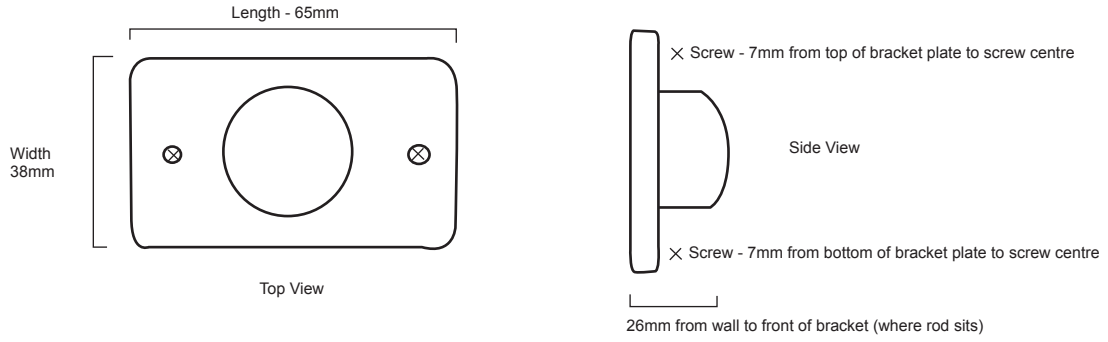


25mm End Wall (Flange) Bracket

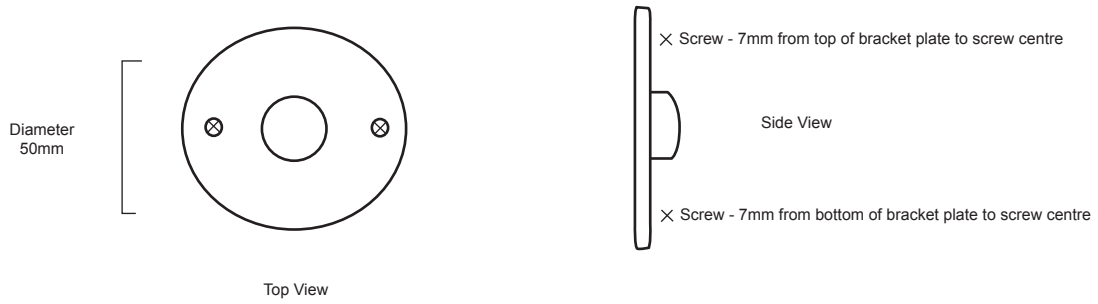


16mm End Wall (Flange) Bracket