OLD STYLE DOUBLE BRACKETS

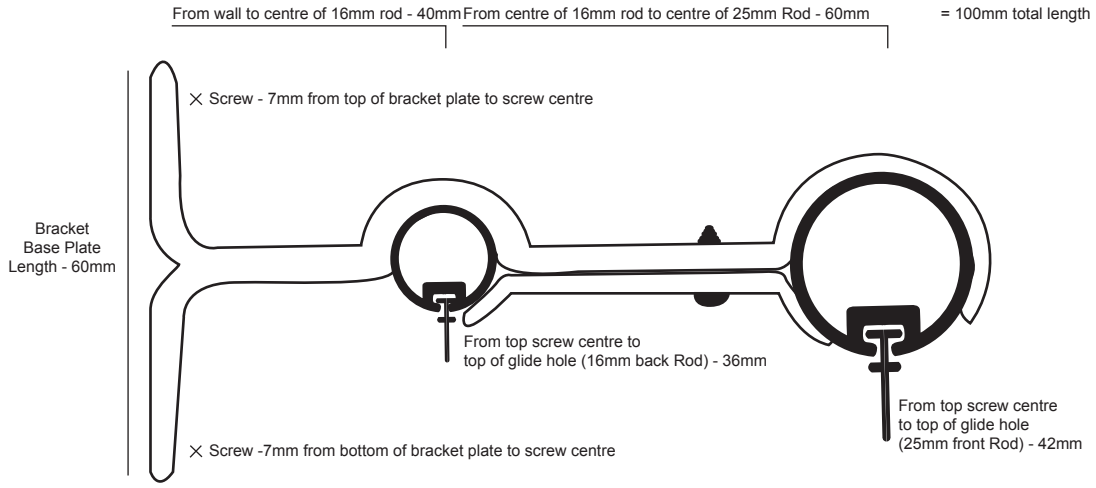

Difference in drop height between Front 25mm Rod & Back 16mm Rod - 6mm
therefore back rod is 6mm higher than front rod

25mm/16mm Double Glide/Glide Bracket (Old Style)

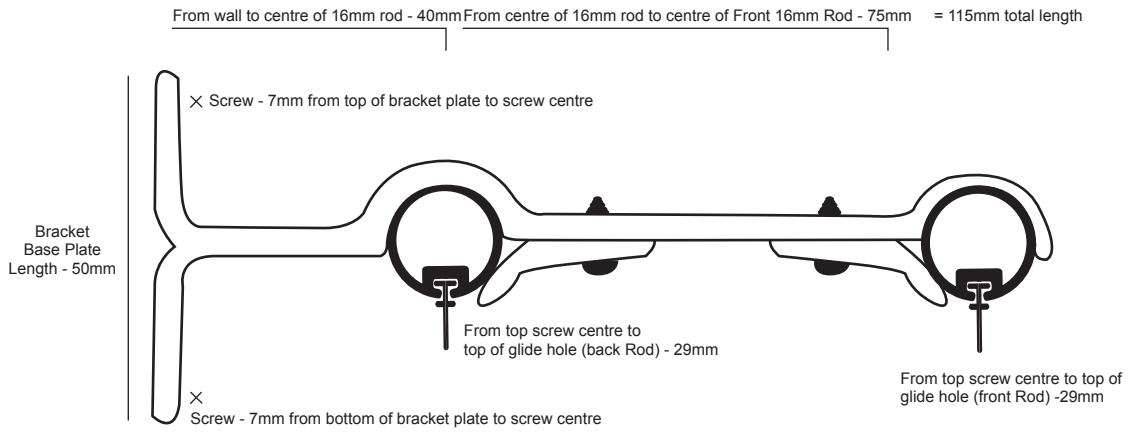

No Height Difference between Front 16mm Rod & Back 16mm Rod

16mm/16mm Double Glide/Glide Bracket (Old Style)