DOUBLE COMBO BRACKETS Continued

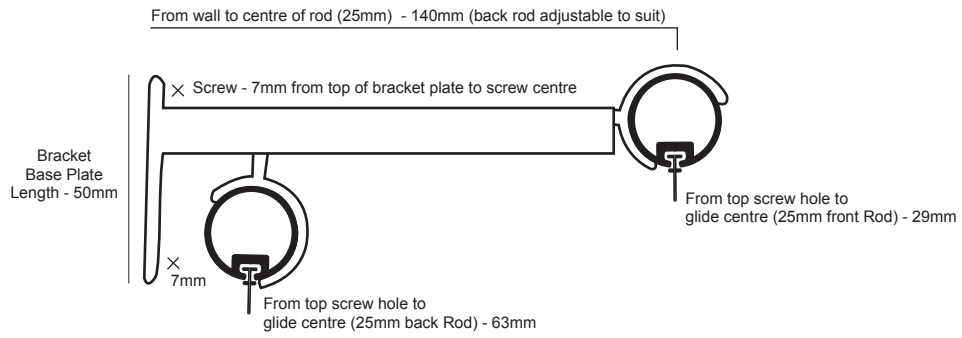

Combo C (Glide/Glide System)
25mm Front / 25mm Back

Therefore rear curtain sits 34mm lower than front curtain

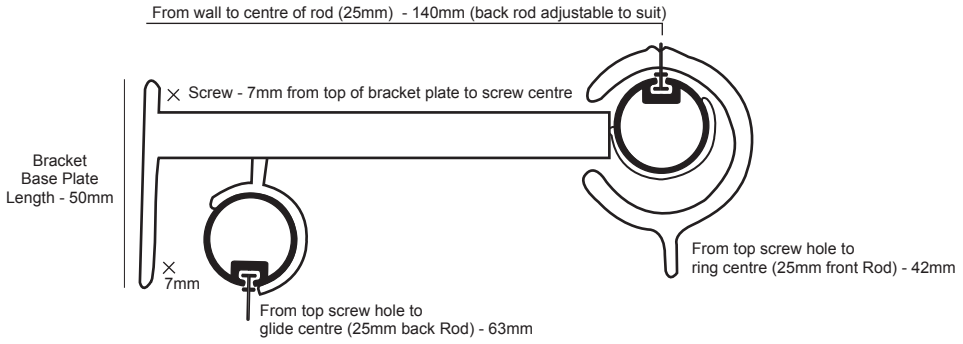

Combo C (Ring/Glide System)
25mm Front / 25mm Back

Therefore rear curtain sits 21mm lower than front curtain

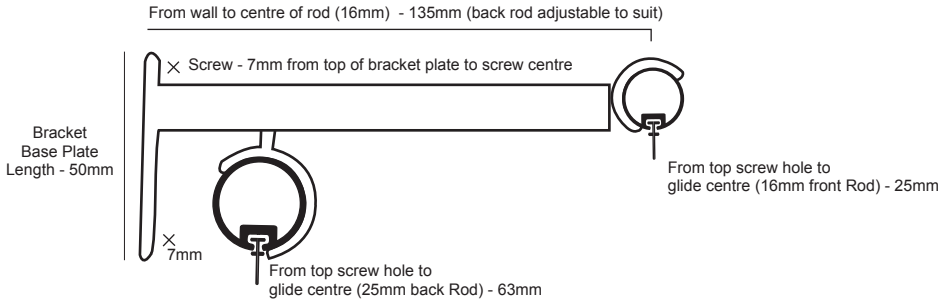

Combo D (Glide/Glide System)
16mm Front / 25mm Back

Therefore rear curtain sits 38mm lower than front curtain

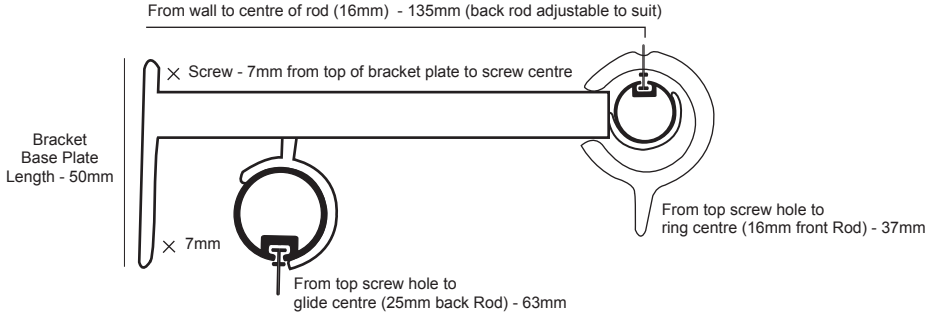

Combo D (Ring/Glide System)
16mm Front / 25mm Back

Therefore rear curtain sits 26mm lower than front curtain