32MM SQUARE ROD - BRACKETS MEASUREMENTS

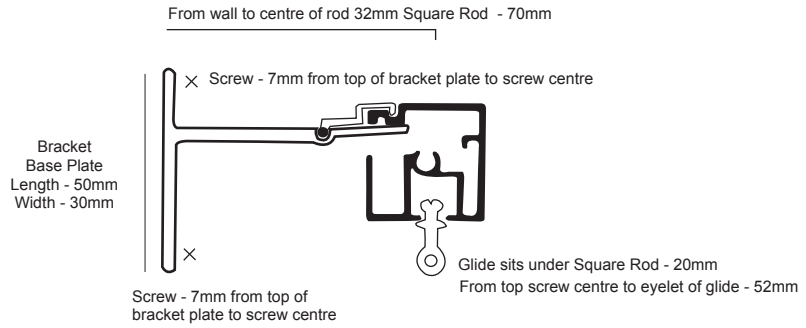

32mm Square Rod Single Bracket (Visible Fixing)

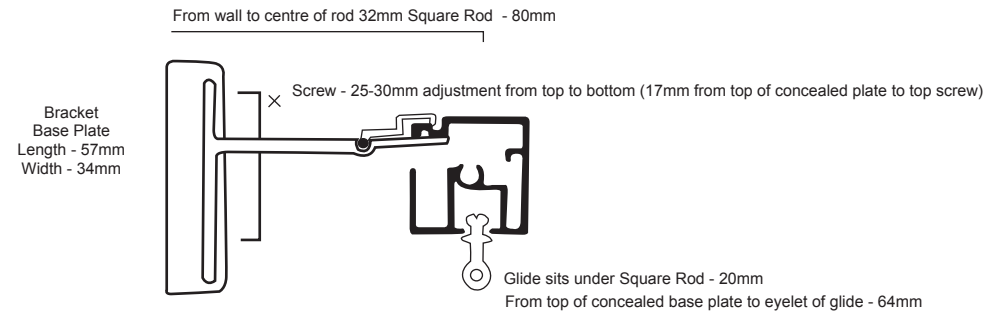

32mm Square Rod Single Bracket (CONCEALED)

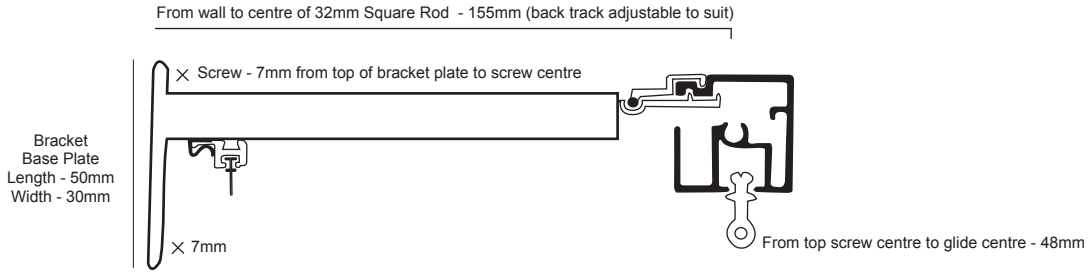

Therefore front curtain sits 3mm lower than rear curtain

32mm Square Double Bracket
32mm Front / Finetrack Back

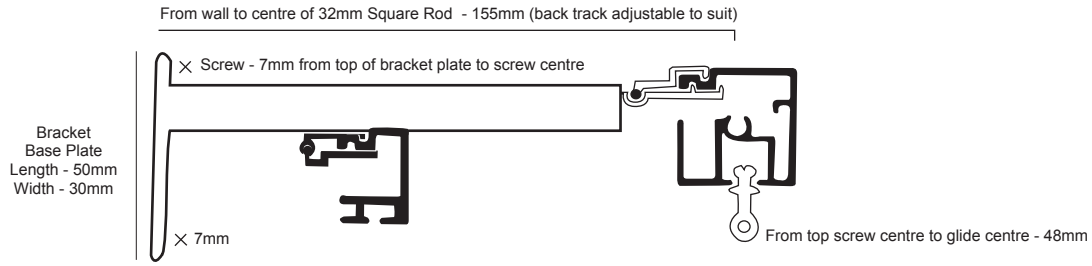

Front curtain sits 5mm higher than rear curtain

32mm Square Rod Double Bracket
32mm Front / Verve Back