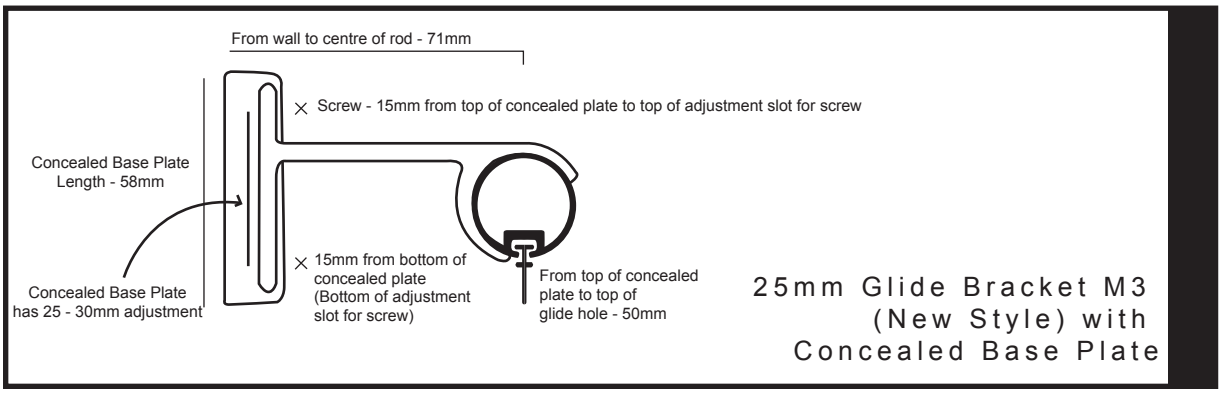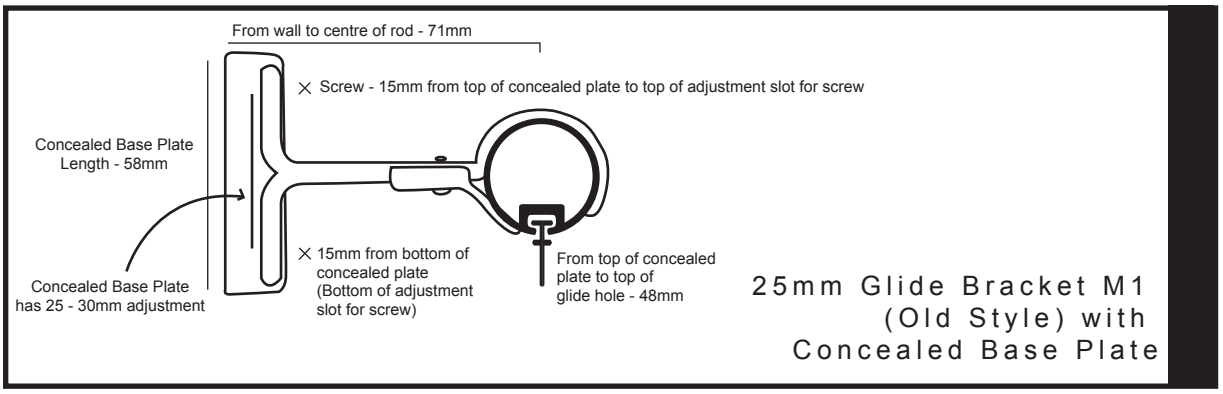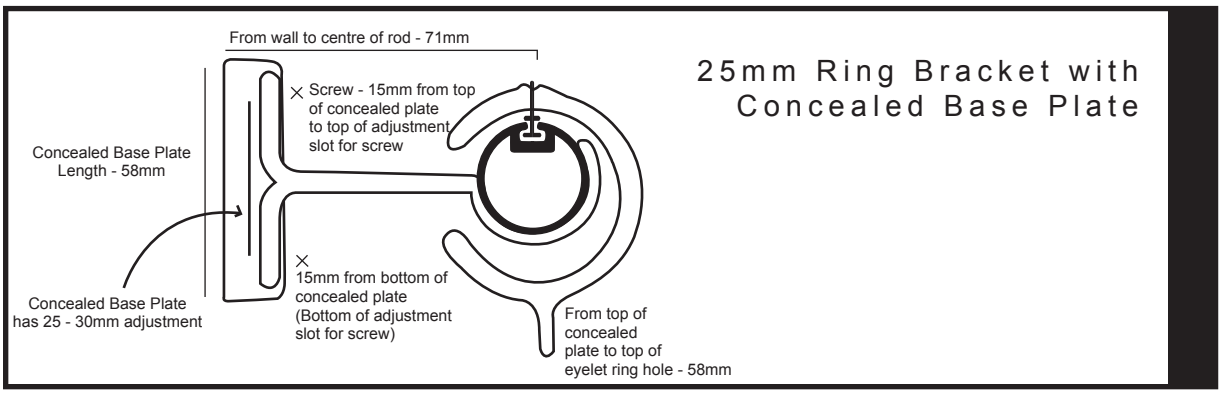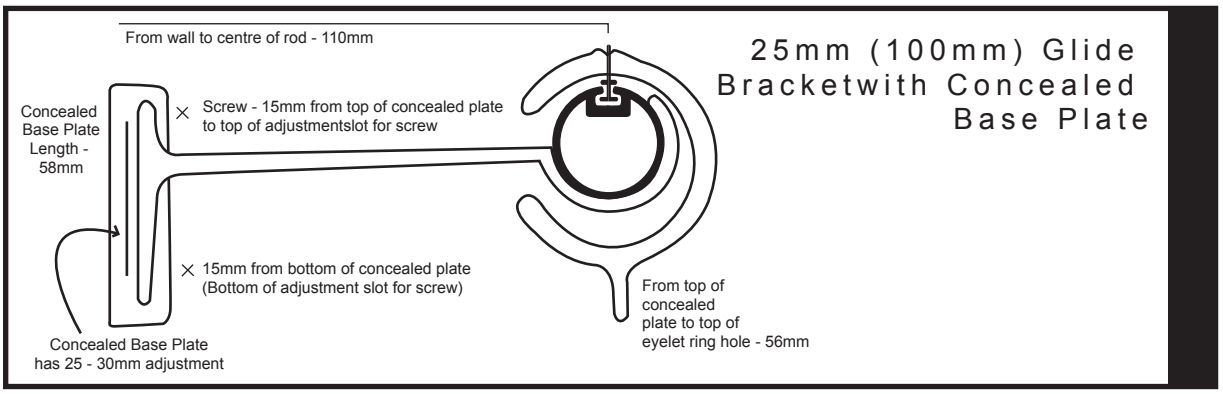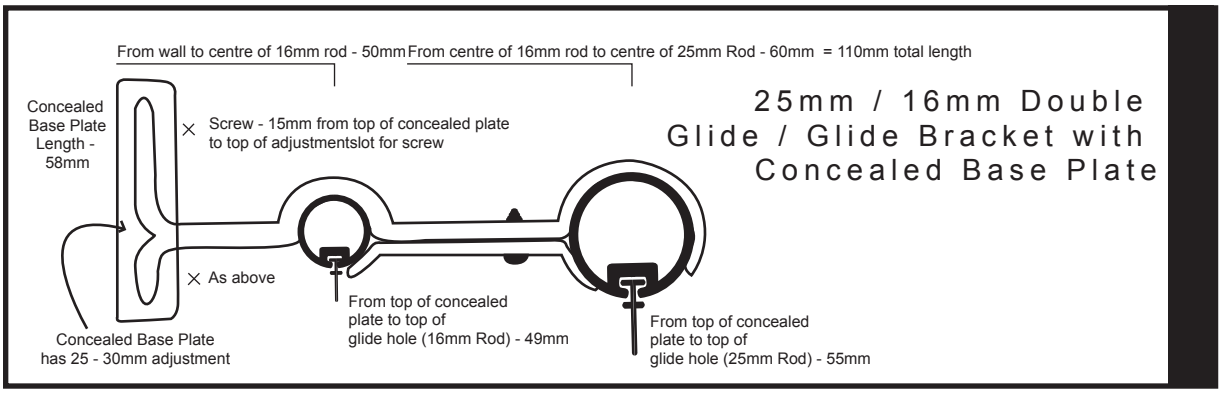25mm Concealed BRACKETS